Encoder model

PHE 903

Part number

1092808-01

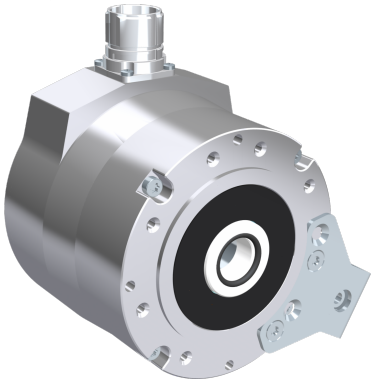

Premium heavy duty hollow shaft encoder, Absolute

- 99,5mm diameter
- Extremely robust design
- Shock and vibration protected
- Inductive scanning
- Electrically insulated shaft

EnDat 2.2

Mechanical data

Operating temperature	-20 °C...+85 °C
Ingress protection class [IEC 60529]	IP67/IP66 (Encoder body/Shaft inlet)
Vibration [IEC 60068-2-64]	≤ 200 m/s²
Shock [IEC 60068-2-27]	≤ 1500 m/s²
Shaft load max (axial/radial)	210 / 420 N
Rotational speed max	6000 rpm
Shaft material	Stainless steel with insulated PEEK insert
Cover material	Aluminium (anodized)
Weight	1700 g
Torque support	120° torque bracket

Encoder configuration

Code key	9036222400
Type	PHE
Model	903
Shaft type	Ø16 mm blind hollow shaft
Flange type	86-flange
Output interface	EnDat 2.2 with additional 1Vpp signals
Absolute resolution	35 bit (19 bit singleturn + 16 bit multiturn)
Incremental signal resolution	32 ppr 1Vpp (Sinusoidal)
Connection type	M23 connector 17-pin
Connecting direction	Radial

Electrical data

Polarity protected	Yes
Current consumption (No load)	100 mA at 5 Vdc
Absolute accuracy	± 100 arcsec
Power supply	3.6...14 Vdc

11 Mar 2026 Specification can be changed without prior notice.

Encoder model

PHE 903

Part number

1092808-01

Dimensions

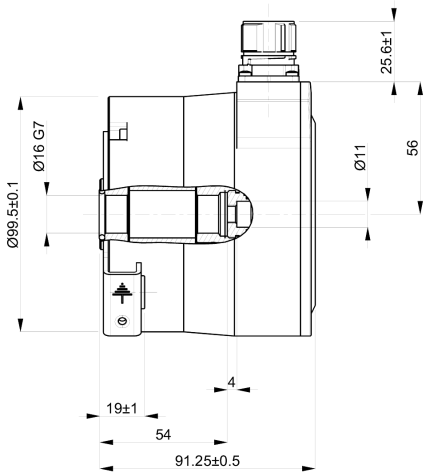

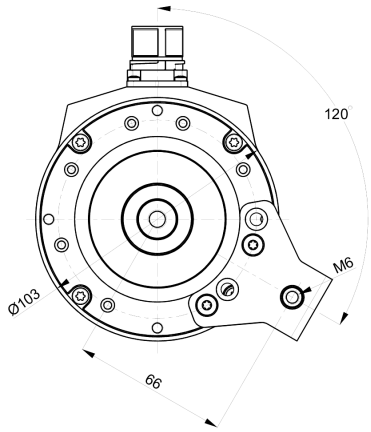

Pin Configuration

Function	Pin / Cable colour
0 Volt	10 / White-Green
0V sense	4 / White
+E Volt	7 / Brown-Green
+EV sense	1 / Blue
A	15 / Green-Black
A inverted	16 / Yellow-Black
B	12 / Blue-Black
B inverted	13 / Red-Black
Data	14 / Grey
Data inverted	17 / Pink
Clock	8 / Violett
Clock inverted	9 / Yellow
Internal shield	11 / Internal shield
Chassis	Shield

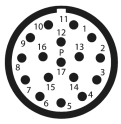

Order information

Part number	1092808-01

11 Mar 2026 Specification can be changed without prior notice.