Encoder model

PSE 923

Part number

1262995-02

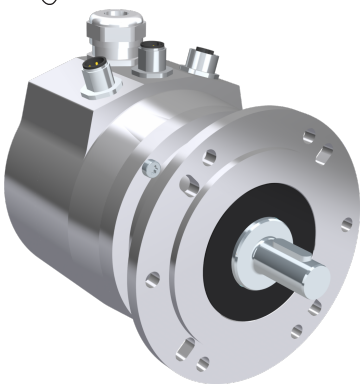

- Performance solid shaft encoder for use in harsh environments
- Inductive scanning for high resistance to shock and vibration
- High resolution encoder
- Dual encoder with absolute and incremental outputs

Mechanical data

Operating temperature	-40 °C...+70 °C
Ingress protection class [IEC 60529]	IP67/IP66 (Encoder body/Shaft inlet)
Vibration [IEC 60068-2-64]	≤ 200 m/s²
Shock [IEC 60068-2-27]	≤ 1500 m/s²
Shaft load max (axial/radial)	210 N / 280 N
Rotational speed max	6000 rpm
Shaft material	Stainless steel
Cover material	Aluminium (anodized)
Weight	2000 g

Encoder configuration

Code key	9234862592
Type	PSE
Model	923
Shaft type	Ø14 mm with key nut
Flange type	Euro-flange (B10-type)

A-Module Specification

Polarity protected	Yes
Output interface	PROFINET RT
Current consumption (No load)	120 mA at 24 Vdc
Cable length max	100 m
Absolute resolution	35 bit (19 bit singleturn + 16 bit multiturn)
Supported profile	Encoder profile 3.162 v.4.2
Power supply	9...36 Vdc
Connection type	3xM12 connectors
Connecting direction	Radial
Supported functions	Preset, Scaling, Code sequence, I&M functions, Velocity
IP Adress	Assigned dynamically via DCP
Baud rate	100 Mbit/s
Absolute accuracy	± 100 arcsec

11 Mar 2026 Specification can be changed without prior notice.

Encoder model

PSE 923

Part number

1262995-02

B-Module specification

Number of channels	6 (S00, S00\, S90, S90\, Sref, Sref\)
Current consumption (No load)	40 mA at 24 Vdc
Power supply	9...30 Vdc
Polarity protected	Yes
Connection type	1x Cable gland M20
Output signal B	High Current HTL (HCHTL)
Resolution B	4096 ppr
Connecting direction	Radial
Output frequency max	200 kHz
Channel separation	90 °el ± 25 °el
Duty cycle	180 °el ± 27 °el @ > 100 rpm
Encoder accuracy	< 100" (arc seconds) @ > 100 rpm
Cable length max	350 m at 100 kHz

11 Mar 2026 Specification can be changed without prior notice.

Encoder model

PSE 923

Part number

1262995-02

Dimensions

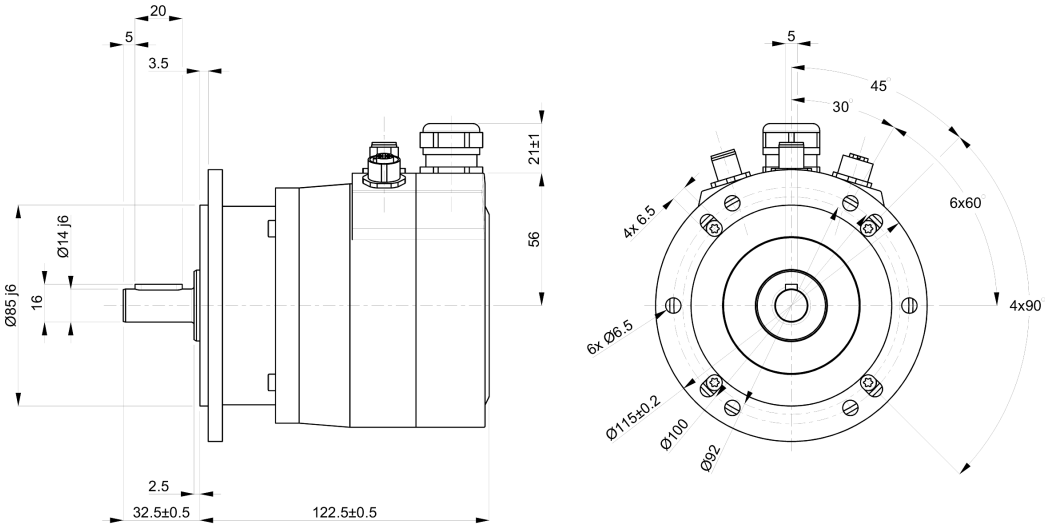

Encoder A - Pin Configuration

Function	Pin
4p D-coded M12 (Port 2)	
Tx+	1
Rx+	2
Tx-	3
Rx-	4
4p D-coded M12 (Port 1)	
Tx+	1
Rx+	2
Tx-	3
RX-	4
4p A-coded M12 (Supply)	
+E Volt	1
0 Volt	3

Port 2

Port 1

Supply

Encoder B - Pin Configuration

Function	Terminal
0 Volt	5
+E Volt	6
Sref inverted	7
Sref	8
S90 inverted	9
S90	10
S00 inverted	11
S00	12

Output signal

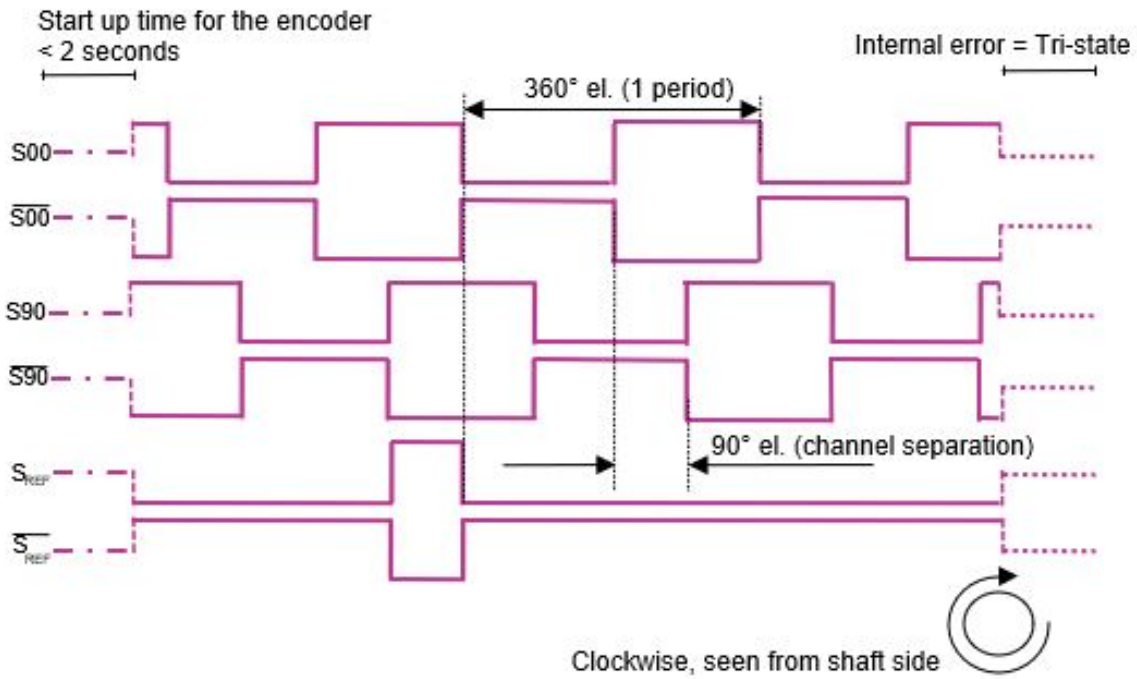

Order information

Part number	1262995-02

11 Mar 2026 Specification can be changed without prior notice.